BKB metal

DESIGNING FUTURE
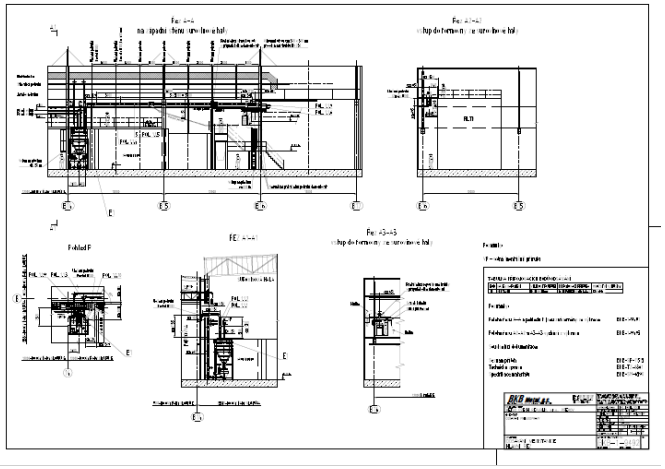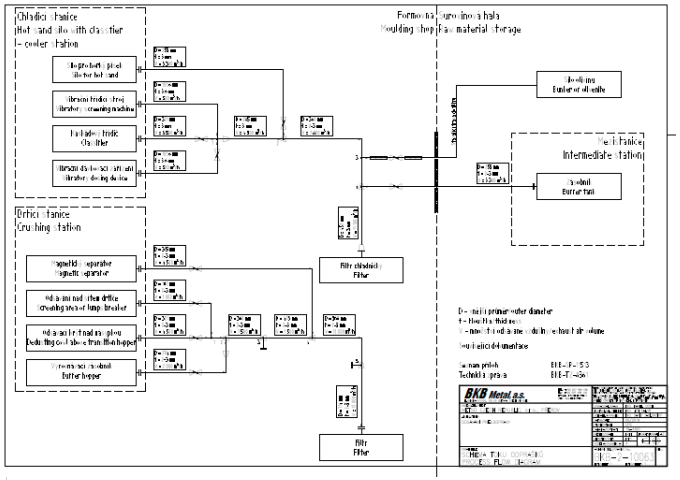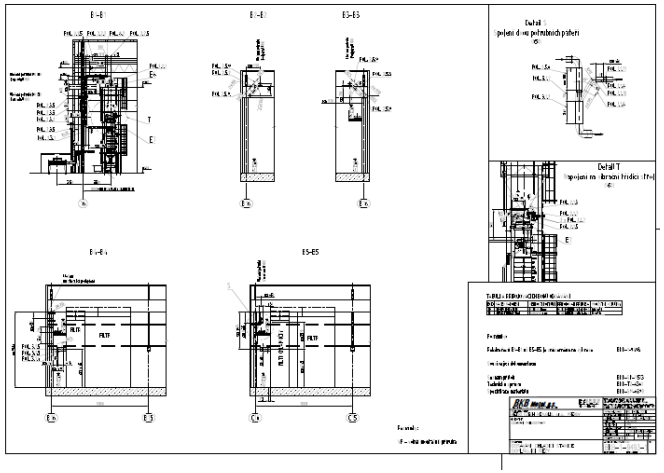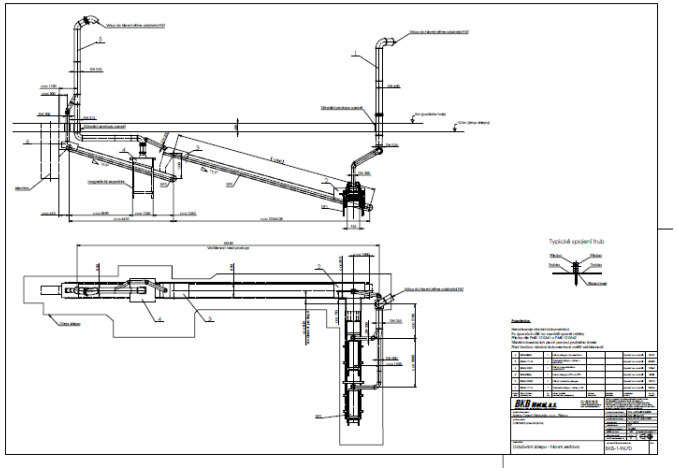
Title: Odprášení pneu dopravy / Dedusting of pneumatic transport
Site / Client: METSO Czech Republic
Scope of work: DPS / Detail Design
Date: 2019